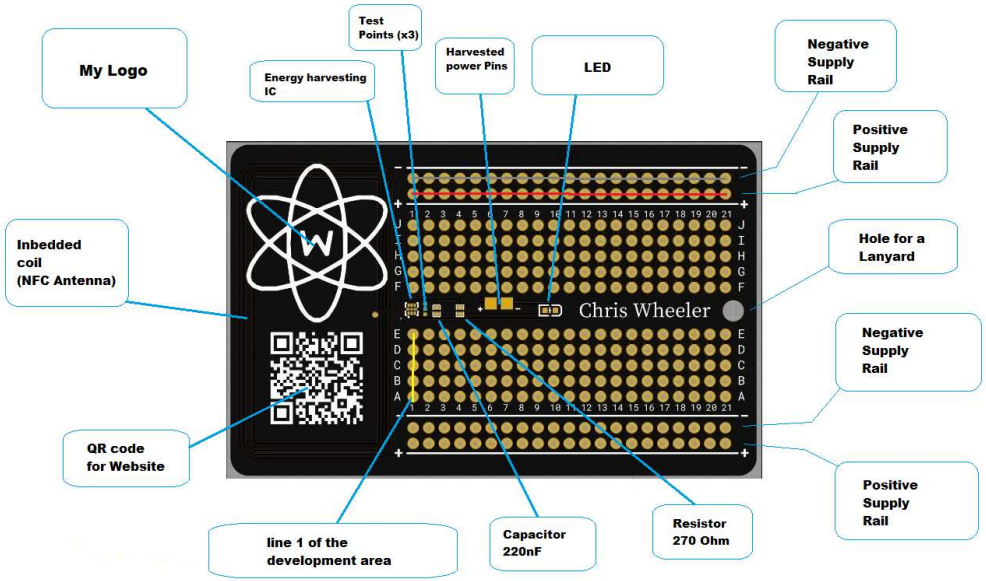
My Logo
Test Points (x3)
Energy harvesting IC
Harvested power Pins
LED
Negative Supply Rail
Positive Supply Rail
Inbedded coil (NFC Antenna)
Hole for a Lanyard
Chris Wheeler
Negative Supply Rail
QR code for Website
Positive Supply Rail
line 1 of the development area
Capacitor 220nF
Resistor 270 Ohm

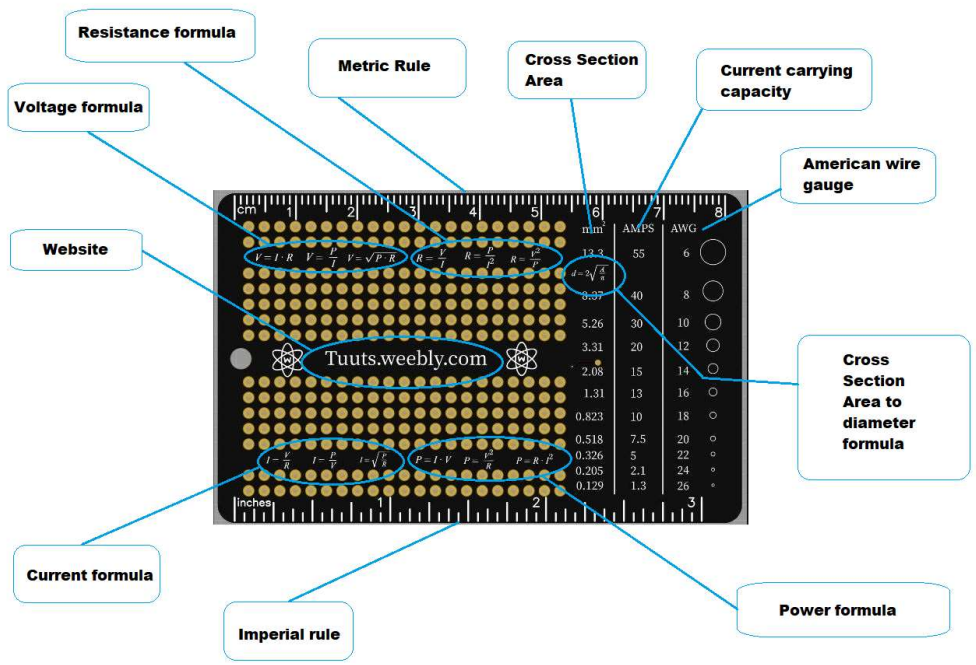
Resistance formula
Metric Rule
Cross Section Area
Current carrying capacity
Voltage formula
American wire gauge
Website
Tuuts.weebly.com
Cross Section Area to diameter formula
Current formula
Imperial rule
Power formula